ATTACHMENT B

Figure 2: Effluent treatment Process Flow Diagram

WATER FLOW SCHEMATIC AND CONTAINMENT MANAGEMENT

Attachment A to Question 2
Food Processing Facilities Form

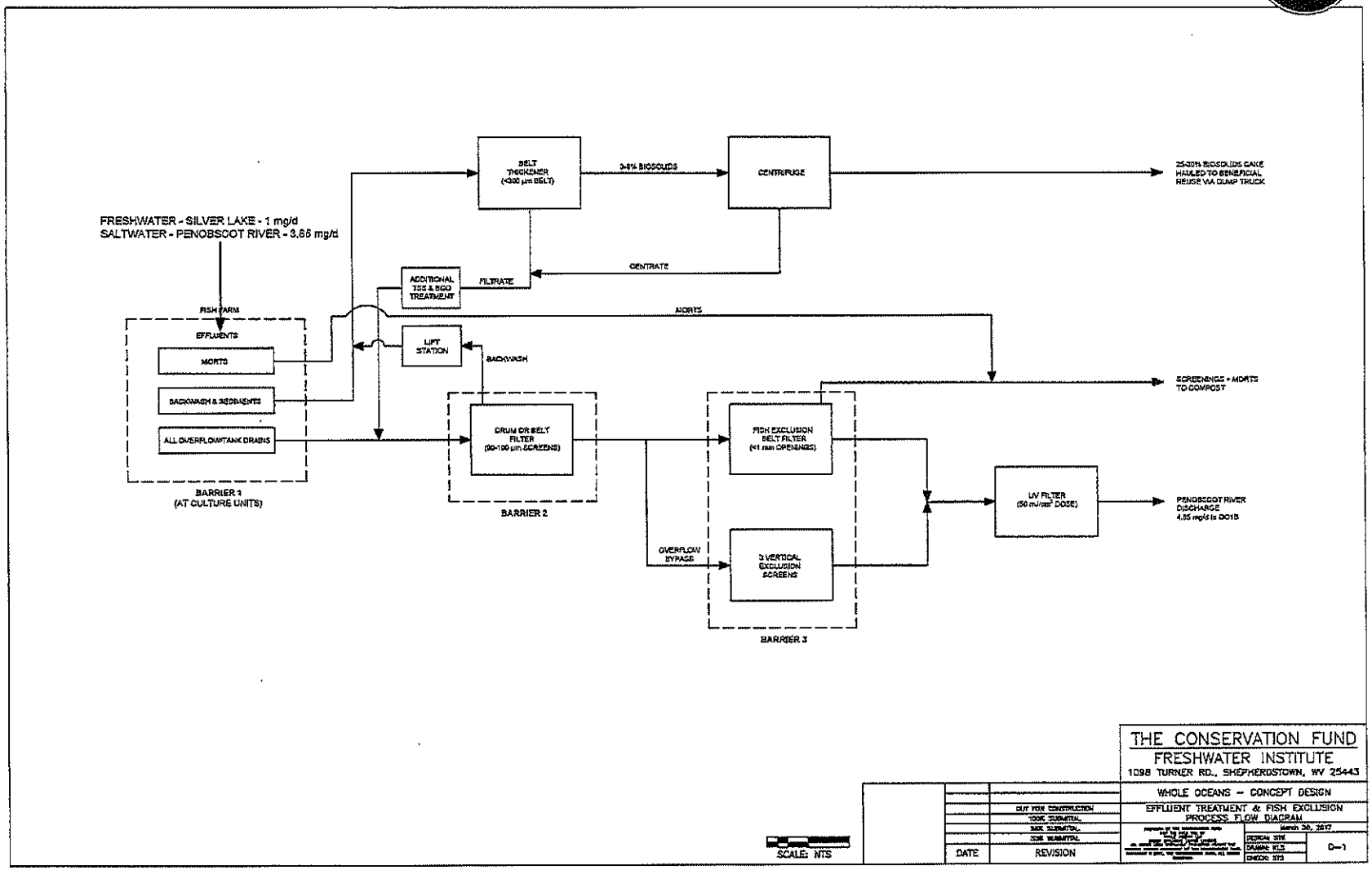

Figure 1: Typical RAS process flow diagram

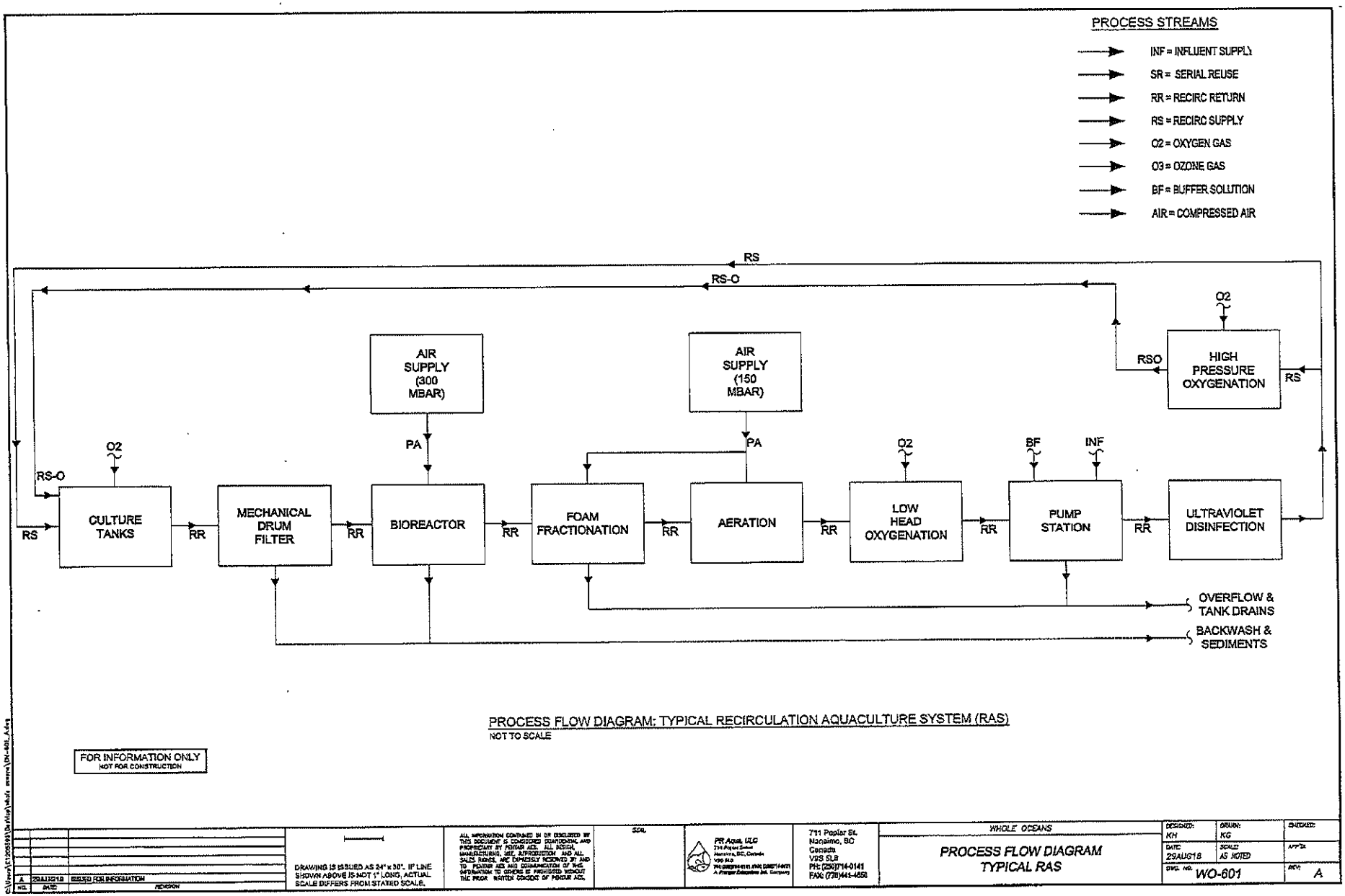

Attachment A to Question 9
Fish Rearing Form

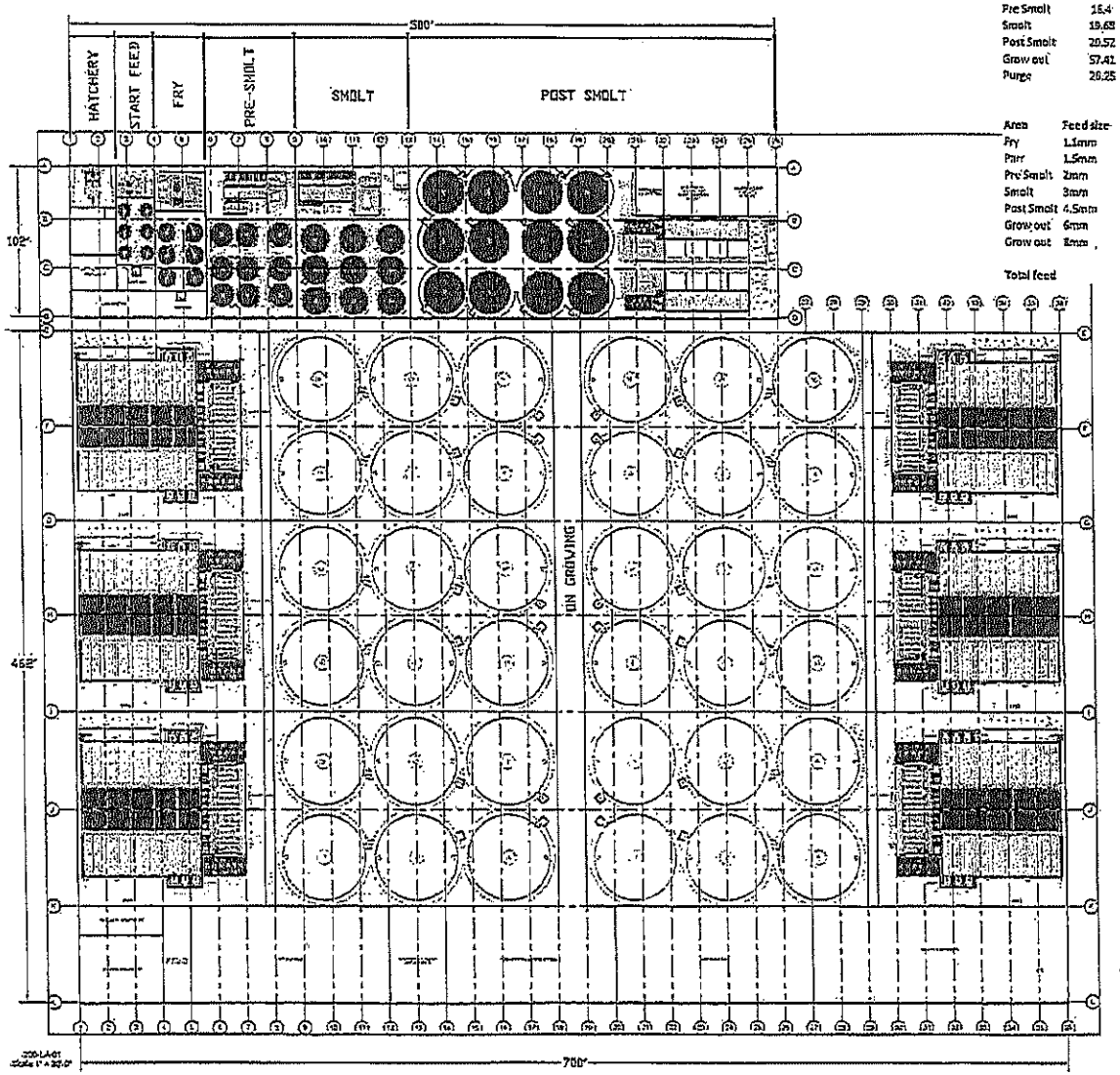

5000 MT				
Area	Diameter(ft.)	H2O height(ft.)	Tank Height(ft.)	Capacity (gal)
Fry	9.84	2.95	3.6	1,700
Parr	13.12	3.94	5.24	4,500
Pre Smolt	16.4	6.06	7.05	9,500
Smolt	19.68	7.55	8.53	17,000
Post Smolt	20.52	11.48	13.12	59,000
Grow out	57.41	23.45	24.77	455,000
Purge	26.25	16.09	18.53	69,000

Area	Feed size	Feed/day(Lbs.)
Fry	1.1mm	66
Parr	1.5mm	220
Pre Smolt	2mm	661
Smolt	3mm	1,102
Post Smolt	4.5mm	4,409
Grow out	6mm	14,550
Grow out	8mm	38,801
Total feed		59,809

P1203 WHOLE OCEANS
LAYOUT DRAWING
GENERAL LAYOUT

WHOLE OCEANS

DATE 03/31/17 DRAWN BY TAG
PROJECT NO. 420205
SCALE NTS
SHEET TITLE LAYOUT DRAWING GENERAL LAYOUT GENERAL DRAWING
SHEET A1.0 REV. 0