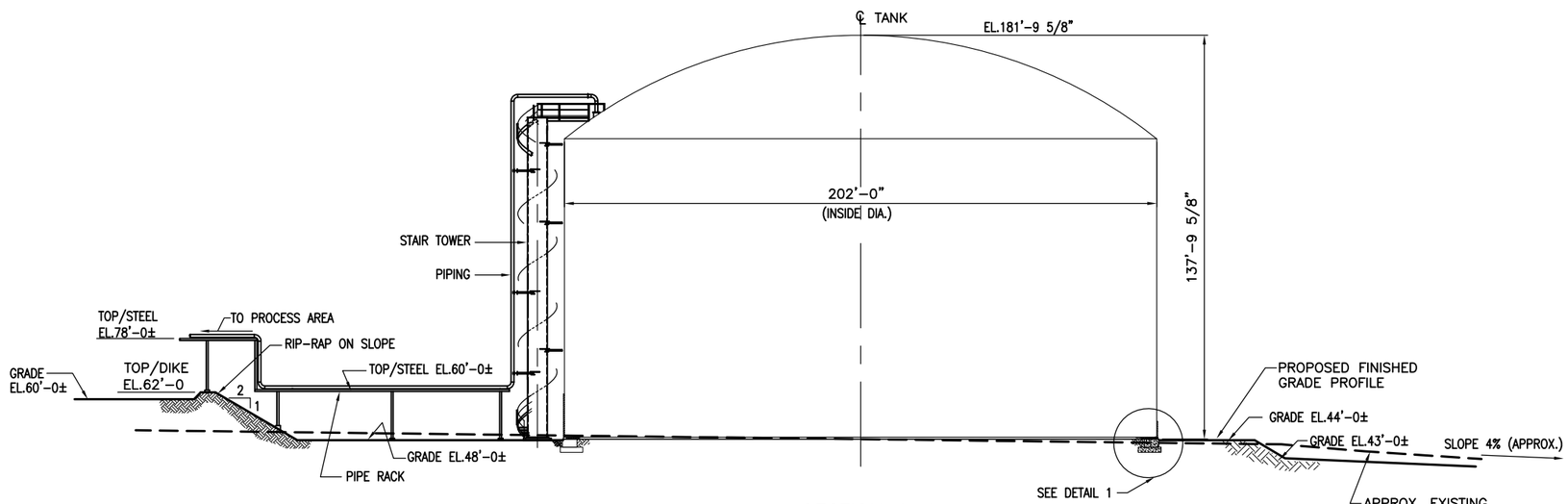

SECTION A–A

(FROM DWG. 2003–01)

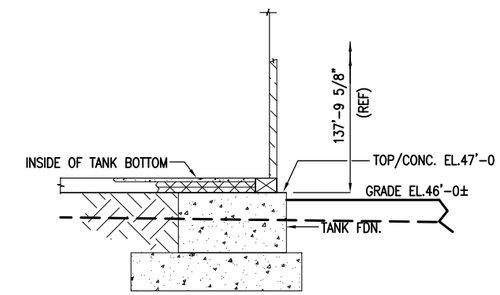

DETAIL 1

(FROM DWG. 2004–01)

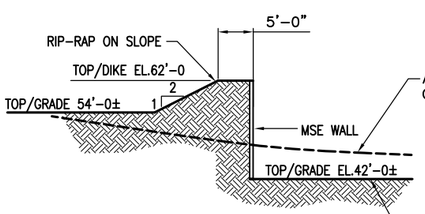

SECTION B–B

(FROM DWG. 2003–01)

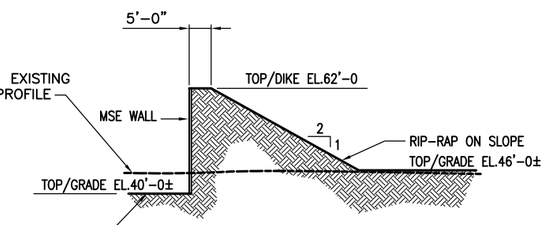

SECTION C–C

(FROM DWG. 2003–01)

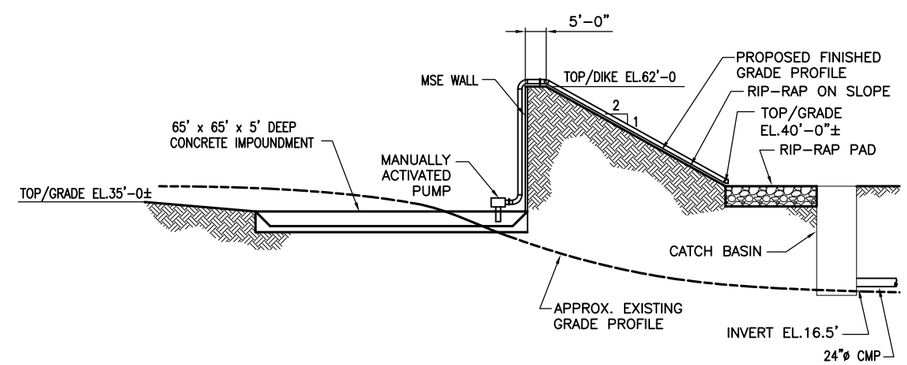

SECTION D–D

(FROM DWG. 2003–01)

ISSUED FOR PERMITTING
NOT FOR CONSTRUCTION

THIS DRAWING AND THE INFORMATION CONTAINED THEREON IS CONFIDENTIAL. IT IS THE PROPERTY OF MATRIX SERVICE AND SHALL BE USED ONLY FOR THE PURPOSE INTENDED. IT SHALL NOT BE COPIED IN WHOLE OR IN PART, PARTS SHALL NOT BE FABRICATED FROM THE DRAWING OR THE INFORMATION DIVULGED WITHOUT MATRIX'S WRITTEN PERMISSION.

REV.	DATE	REVISION DESCRIPTION	BY	APVD.
E	15DEC11	CORRECTED TOP OF TANK ELEVATION	JRT	MRM
D	08JUN11	REVISED SECTIONS	SEG	RPI
C	01JUN11	REVISED ELEVATIONS, ADDED EXISTING GRADE	SEG	RPI
B	28APR11	REVISED SECTIONS	JRT	RPI

SEAL: STATE OF MAINE — KENNETH J. ERDMANN — 9656 — REGISTERED PROFESSIONAL ENGINEER

SCALE

MATRIX SERVICE
INDUSTRIAL SERVICE CONTRACTOR

CUSTOMER: DCP MIDSTREAM
LPG STORAGE FACILITY SEARSPORT, MAINE

TITLE: LPG TANK AREA
GRADING SECTIONS AND DETAILS

DRAWN BY:	JRT	25APR11
CHECKED BY:	RPI	25APR11
APPROV'D. BY:		
OFFICE: PITTSBURGH	CONTRACT: 4410–8173	
DWG. NO. 2004–01	SHEET 02 OF SHEET	REV. E