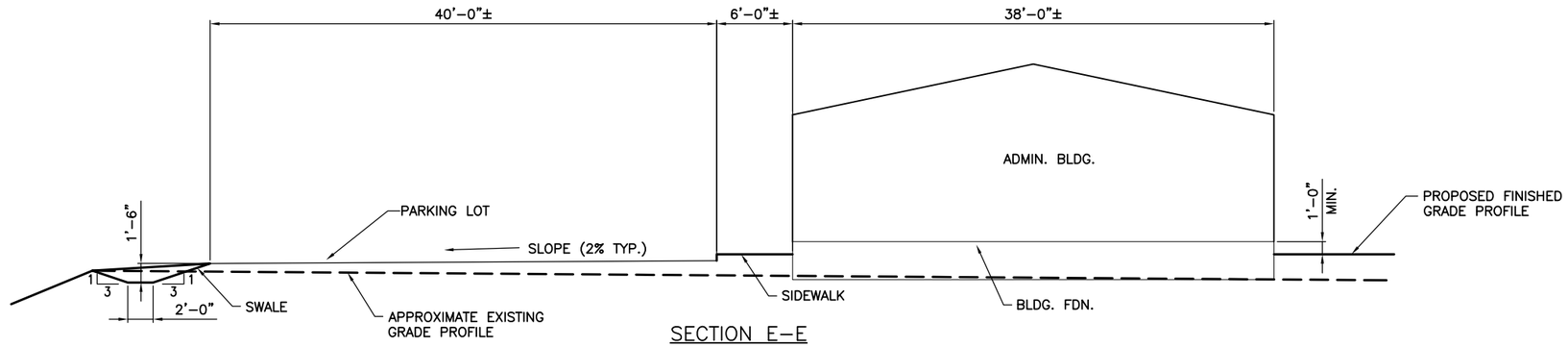

SECTION E-E

(TYPICAL SECTION AT ADMIN. BLDG.)

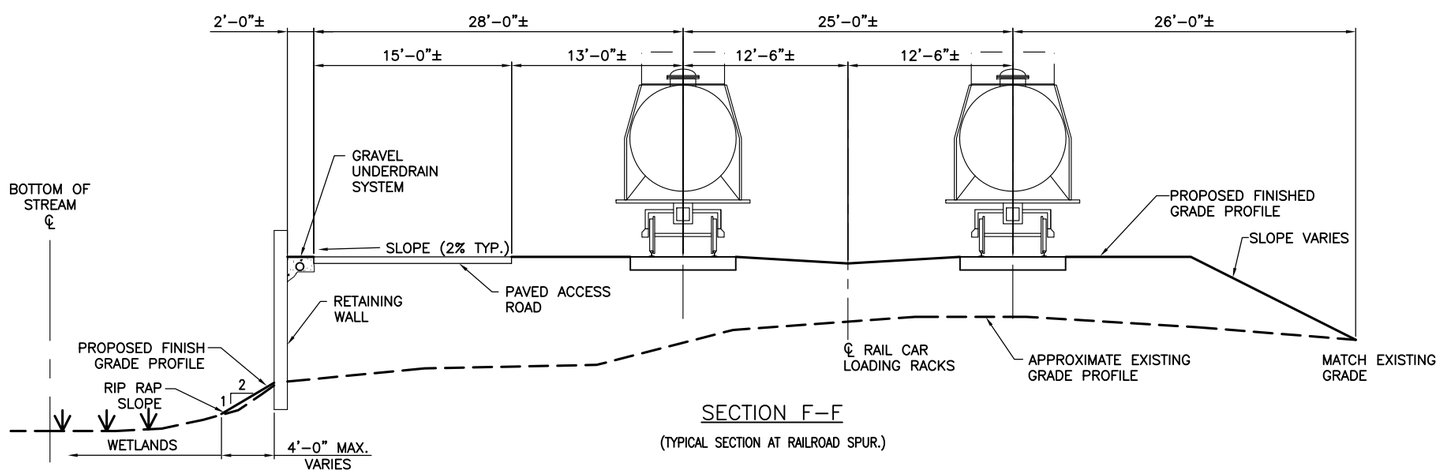

SECTION F-F

(TYPICAL SECTION AT RAILROAD SPUR.)

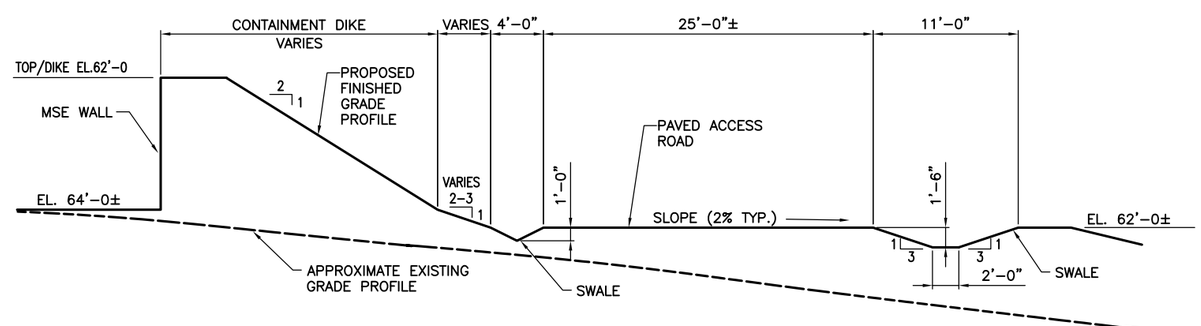

SECTION G-G

ISSUED FOR PERMITTING
NOT FOR CONSTRUCTION

THIS DRAWING AND THE INFORMATION CONTAINED THEREON IS CONFIDENTIAL. IT IS THE PROPERTY OF MATRIX SERVICE AND SHALL BE USED ONLY FOR THE PURPOSE INTENDED. IT SHALL NOT BE COPIED IN WHOLE OR IN PART, PARTS SHALL NOT BE FABRICATED FROM THE DRAWING OR THE INFORMATION DIVULGED WITHOUT MATRIX'S WRITTEN PERMISSION.

REV.	DATE	REVISION DESCRIPTION	BY	APVD.
C	08JUN11	REVISED SECTIONS	SEG	RPI
B	01JUN11	REVISED SECTIONS	SEG	RPI

SEAL: STATE OF MAINE — KENNETH ERDMANN 9656 — REGISTERED PROFESSIONAL ENGINEER

SCALE

MATRIX SERVICE
INDUSTRIAL SERVICE CONTRACTOR

CUSTOMER: DCP MIDSTREAM
LPG STORAGE FACILITY SEARSPORT, MAINE

TITLE: LPG TANK AREA
GRADING SECTIONS AND DETAILS

DRAWN BY:	SEG	02JUN11
CHECKED BY:	RPI	02JUN11
APPROV'D. BY:		
OFFICE	PITTSBURGH	
CONTRACT	4410-8173	
DWG. NO.	2004-02	
SHEET OF SHEET	02	
REV.	C	