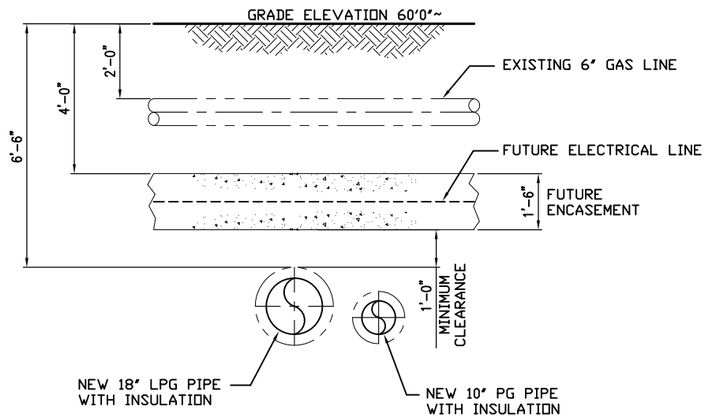

DETAIL 1

ELEVATION @ PIPE CROSSING

ISSUED FOR PERMITTING
NOT FOR CONSTRUCTION

THIS DRAWING AND THE INFORMATION CONTAINED THEREON IS CONFIDENTIAL. IT IS THE PROPERTY OF MATRIX SERVICE AND SHALL BE USED ONLY FOR THE PURPOSE INTENDED. IT SHALL NOT BE COPIED IN WHOLE OR IN PART, PARTS SHALL NOT BE FABRICATED FROM THE DRAWING OR THE INFORMATION DIVULGED WITHOUT MATRIX'S WRITTEN PERMISSION.

REV.	DATE	REVISION DESCRIPTION	BY	APVD.
B	19MAY11	ALTERNATE PIPE ROUTING	DJK	DCM

SEAL: STATE OF MAINE ERDMANN 9656 PROFESSIONAL ENGINEER

SCALE NTS

MATRIX SERVICE
INDUSTRIAL SERVICE CONTRACTOR

CUSTOMER: DCP MIDSTREAM
LPG STORAGE FACILITY SEARSPORT, MAINE

TITLE: PIPING DETAILS

DRAWN BY:	DJK	19MAY11
CHECKED BY:	DCM	19MAY11
APPROV'D. BY:		
OFFICE: PITTSBURGH	CONTRACT: 4410-8173	
DWG. NO. 5091-01	SHEET 01 OF SHEET	REV. B