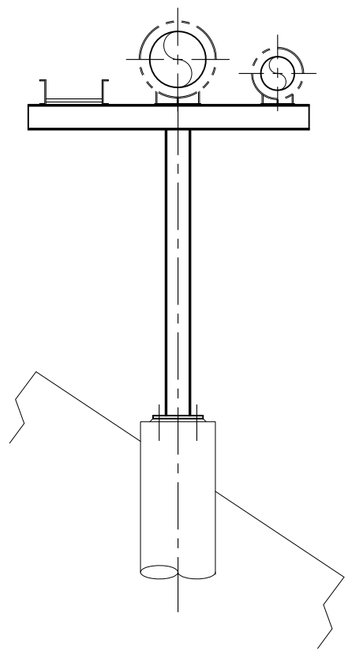

SECTION "A–A" TYPICAL PIPE SUPPORT AT EXISTING DIKE

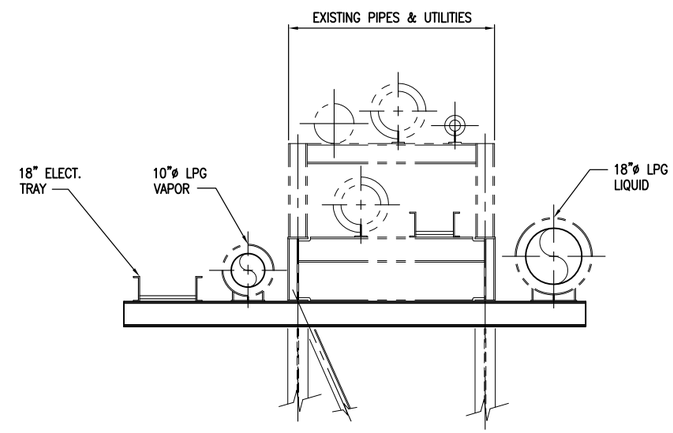

SECTION "B–B" AT EXISTING RAILROAD BRIDGE

ISSUED FOR PERMITTING
NOT FOR CONSTRUCTION

THIS DRAWING AND THE INFORMATION CONTAINED THEREON IS CONFIDENTIAL. IT IS THE PROPERTY OF MATRIX SERVICE AND SHALL BE USED ONLY FOR THE PURPOSE INTENDED. IT SHALL NOT BE COPIED IN WHOLE OR IN PART, PARTS SHALL NOT BE FABRICATED FROM THE DRAWING OR THE INFORMATION DIVULGED WITHOUT MATRIX'S WRITTEN PERMISSION.

REV.	DATE	REVISION DESCRIPTION	BY	APVD.
C	30AUG11	REVISED PIPE SUPPORTS		

SEAL: STATE OF MAINE — KENNETH W. ERDMANN — 9656 — REGISTERED PROFESSIONAL ENGINEER

SCALE NTS

MATRIX SERVICE
INDUSTRIAL SERVICE CONTRACTOR

CUSTOMER: DCP MIDSTREAM
LPG STORAGE FACILITY SEARSPORT, MAINE

TITLE: PIPING SECTIONS AND DETAILS

DRAWN BY:	DJK	14FEB11
CHECKED BY:	MRM	14FEB11
APPROV'D. BY:		
OFFICE	PITTSBURGH	CONTRACT 4410–8173
DWG. NO.	5041–01	SHEET 01 OF SHEET; REV. C