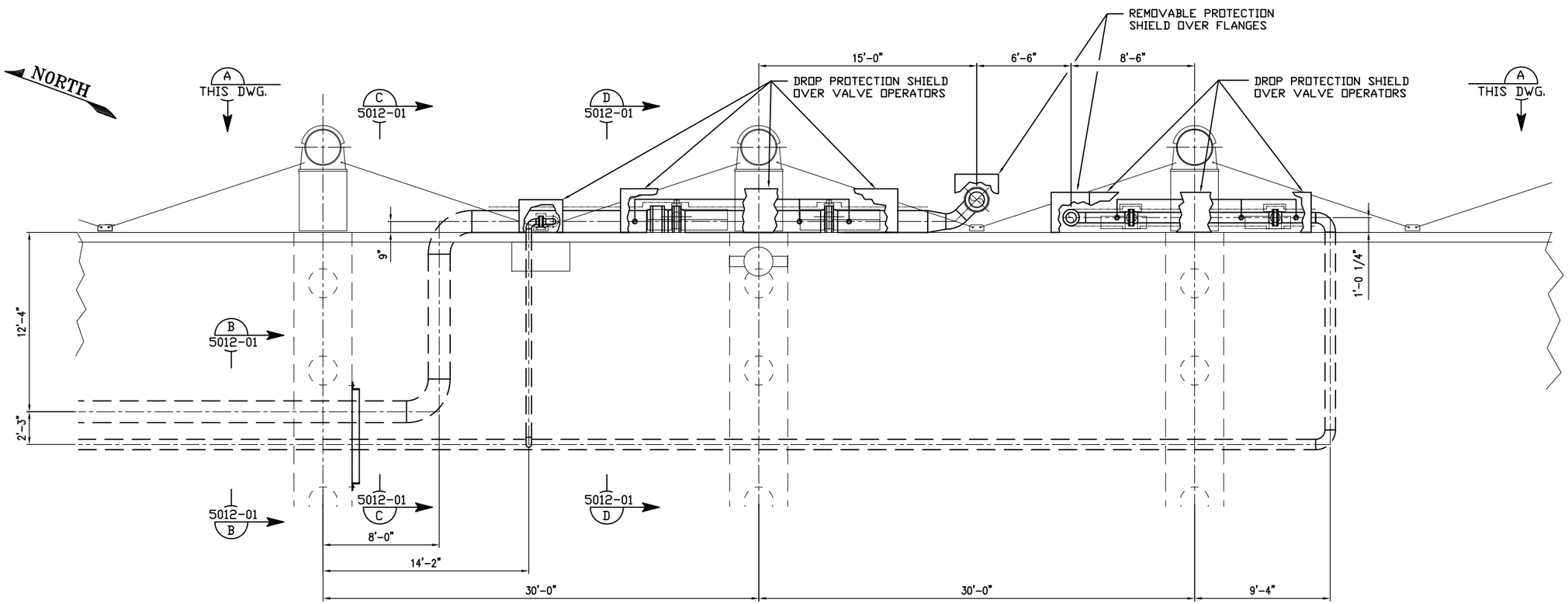

ENLARGED PLAN OF UNLOADING STATION ON PIER

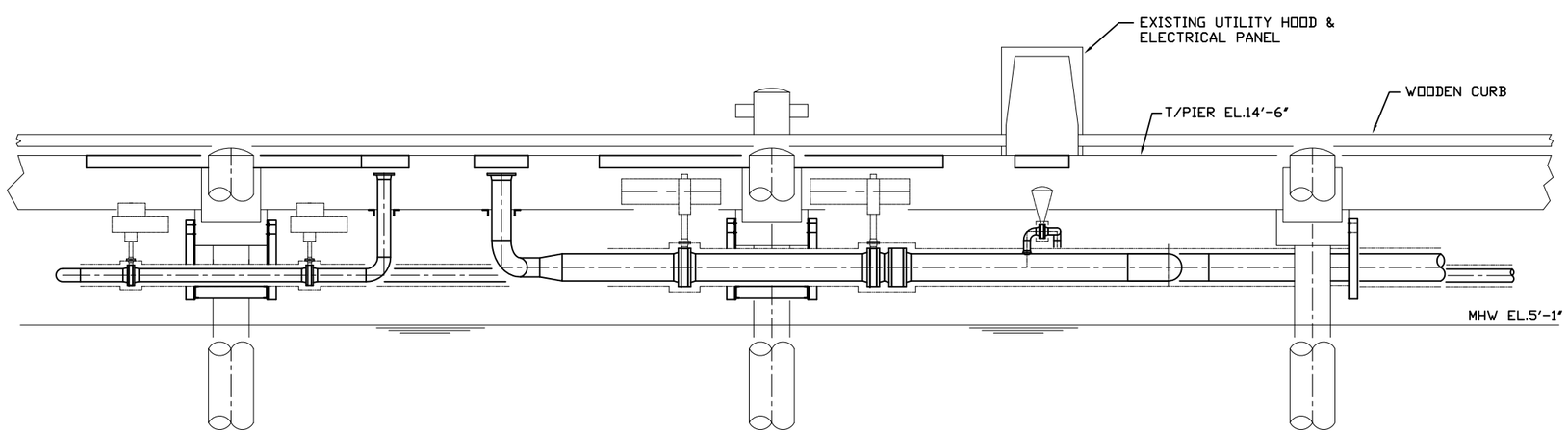

SECTION "A–A"

THIS DRAWING AND THE INFORMATION CONTAINED THEREON IS CONFIDENTIAL. IT IS THE PROPERTY OF MATRIX SERVICE AND SHALL BE USED ONLY FOR THE PURPOSE INTENDED. IT SHALL NOT BE COPIED IN WHOLE OR IN PART, PARTS SHALL NOT BE FABRICATED FROM THE DRAWING OR THE INFORMATION DIVULGED WITHOUT MATRIX'S WRITTEN PERMISSION.

REV.	DATE	REVISION DESCRIPTION	BY	APVD.
C	30AUG11	REVISED BACKGROUND	DJK	DCM
B	19MAY11	ALTERNATIVE PIPE ROUTING	DJK	DCM

SEAL: STATE OF MAINE, ERIC MANN 9658, REGISTERED PROFESSIONAL ENGINEER

SCALE 1/4" = 1'-0"

MATRIX SERVICE
INDUSTRIAL SERVICE CONTRACTOR

CUSTOMER: DCP MIDSTREAM
LPG STORAGE FACILITY SEARSPORT, MAINE

TITLE: PIPING PLAN & SECTION AT DOCK

DRAWN BY:	DJK	14FEB11
CHECKED BY:	MRM	14FEB11
APPROV'D. BY:		
OFFICE	PITTSBURGH	
CONTRACT	4410–8173	
DWG. NO.	5011–01	
SHEET OF SHEET	01	
REV.	C	