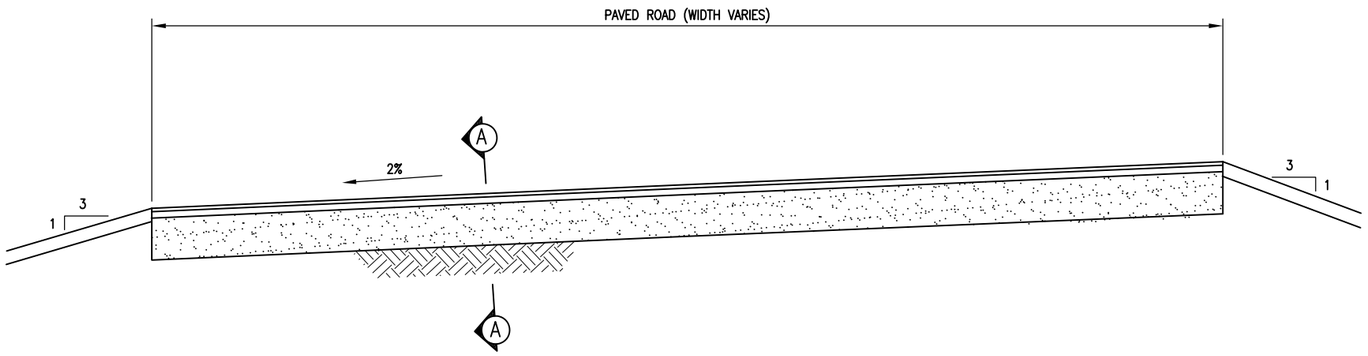

SECTION THRU TYPICAL PAVED ROADWAY

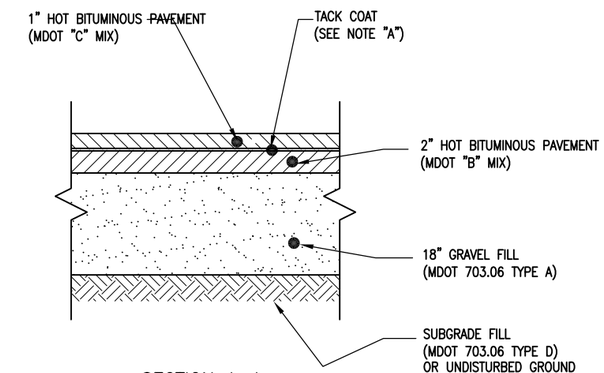

SECTION A–A

NOTE "A"
ELIMINATE TACK COAT IF WEARING COURSE IS INSTALLED WITHIN 72 HOURS OF BINDER COURSE.

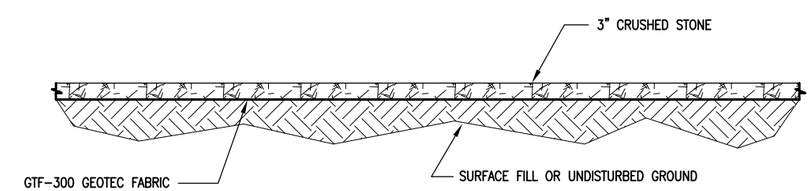

SECTION THRU GRAVEL COVERED AREA

(TYPICAL SURFACE AROUND TANK AND EQUIPMENT AREAS)

NOTES:

1.) WORK THIS DWG. WITH DWG. 2003–01 AND GROUND COVERAGE DWG. 2002–01.

ISSUED FOR PERMITTING
NOT FOR CONSTRUCTION

THIS DRAWING AND THE INFORMATION CONTAINED THEREON IS CONFIDENTIAL. IT IS THE PROPERTY OF MATRIX SERVICE AND SHALL BE USED ONLY FOR THE PURPOSE INTENDED. IT SHALL NOT BE COPIED IN WHOLE OR IN PART, PARTS SHALL NOT BE FABRICATED FROM THE DRAWING OR THE INFORMATION DIVULGED WITHOUT MATRIX'S WRITTEN PERMISSION.

REV.	DATE	REVISION DESCRIPTION	BY	APVD.
B	08JUN11	REVISED PAVED ROAD SECTION	JRT	RPI

STATE OF MAINE · ERDMANN 9656 · REGISTERED PROFESSIONAL ENGINEER

SCALE NTS

MATRIX SERVICE
INDUSTRIAL SERVICE CONTRACTOR

CUSTOMER: DCP MIDSTREAM
LPG STORAGE FACILITY SEARSPORT, MAINE

TITLE: ROADWAYS
SECTIONS AND DETAILS

DRAWN BY:	JRT	28APR11
CHECKED BY:	RPI	28APR11
APPROV'D. BY:		
OFFICE: PITTSBURGH	CONTRACT: 4410–8173	
DWG. NO. 2005–01	SHEET 01 OF SHEET	REV. B